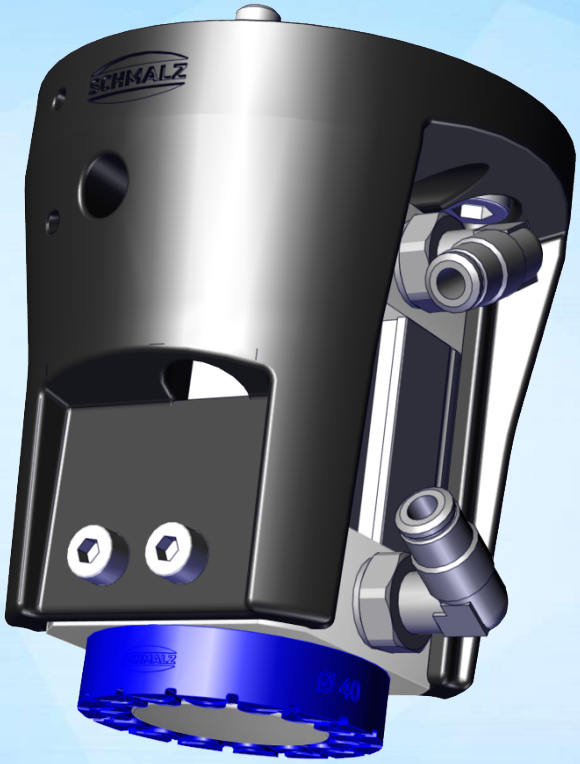

Operating instructions

Rob-Set SGM-SV 40 UR

WWW.SCHMALZ.COM

EN-US · 30.30.01.02746 · 01 · 12/22

Note

The Operating instructions were originally written in German. Store in a safe place for future reference. Subject to technical changes without notice. No responsibility is taken for printing or other types of errors.

Published by

© J. Schmalz GmbH, 12/22

Contact

J. Schmalz GmbH

Johannes-Schmalz-Str. 1

72293 Glatten, Germany

T: +49 (0) 7443 2403-0

schmalz@schmalz.de

www.schmalz.com

Contact information for Schmalz companies and trade partners worldwide can be found at:

www.schmalz.com/salesnetwork

Contents

1 Important Information

1.1 Note on Using this Document

J. Schmalz GmbH is generally referred to as Schmalz in this document.

The document contains important notes and information about the different operating phases of the product:

- Transport, storage, start of operations and decommissioning
- Safe operation, required maintenance, rectification of any faults

The document describes the product at the time of delivery by Schmalz and is aimed at:

- Installers who are trained in handling the product and can operate and install it
- Technically trained service personnel performing the maintenance work
- Technically trained persons who work on electrical equipment

1.2 The technical documentation is part of the product

1. For problem-free and safe operation, follow the instructions in the documents.
2. Keep the technical documentation in close proximity to the product. The documentation must be accessible to personnel at all times.
3. Pass on the technical documentation to subsequent users.

⇨ Failure to follow the instructions in these Operating instructions may result in injuries!

⇨ Schmalz is not liable for damage or malfunctions that result from failure to heed these instructions.

If you still have questions after reading the technical documentation, contact Schmalz Service at:

www.schmalz.com/services

1.3 Other Applicable Documents

When using the SGM-SV, the following technical documents must also be observed:

- The operating instructions for the magnetic gripper SGM-SV --> part number 30.30.01.02746
- The operating instructions for the proximity sensor (option) --> part number 30.30.01.01624
- The assembly instructions for the valve set with energy chain --> part number 30.30.01.02876

1.4 Type Plate

The type plate (1) is permanently attached to the product at the location shown and must always be clearly legible.

It contains important information about the product:

- Part sales designation/type
- Part number
- Serial number
- Coded date of manufacture
- Permitted pressure range

Please specify all the information above when ordering replacement parts, making warranty claims or for any other inquiries.

1.5 Symbols

This symbol indicates useful and important information.

✓ This symbol represents a prerequisite that must be met prior to an operational step.

▸ This symbol represents an action to be performed.

⇨ This symbol represents the result of an action.

Actions that consist of more than one step are numbered:

1. First action to be performed.
2. Second action to be performed.

2 Fundamental Safety Instructions

2.1 Intended Use

The magnetic gripper is used, preferably with a collaborative robot, for handling ferromagnetic workpieces such as perforated plates, complex laser-cut workpieces, sheet metal with drill holes and apertures.

The operator is required to document the static strength and holding force and to comply with safety factors.
For system designs, a safety factor of S=3 should be applied.

The magnetic gripper is built in accordance with the latest standards of technology and is shipped in safe condition. However, hazards can arise during use. Observe the warnings in these operating instructions.

The load to be lifted must be sufficiently rigid so that it is not damaged during gripping and handling.

The maximum lift capacity must not be exceeded (> See ch. Technical Data).

2.2 Non-Intended Use

Schmalz accepts no liability for damage caused by the use of the gripper SGM-SV for purposes other than those described under Intended Use. Use of the gripper SGM-SV for loads that are not specified in the order confirmation or that have different physical properties than those specified in the order confirmation shall be considered non-intended use. In particular, the following are considered non-intended use:

- Use in potentially explosive atmospheres
- Storing loads when active
- Supporting the lifting process by applying external forces

2.3 Personnel Qualifications

Unqualified personnel cannot recognize dangers and are therefore exposed to higher risks!

The operating company must ensure the following points:

- The personnel must be commissioned for the activities described in these instructions.
- The staff must be at least 18 years of age and physically and mentally capable.
- The product must be operated only by persons who have undergone appropriate training.
- Personnel must receive regular safety briefings (frequency as per country-specific regulations).

The following target groups are addressed in these instructions:

- Mechanical and electrical specialists who are responsible for installing, troubleshooting and maintaining the product.

The operator of the system must comply with country-specific regulations regarding the age, ability and training of the personnel.

Applicable for Germany:

A qualified employee is defined as an employee who has received technical training and has the knowledge and experience – including knowledge of applicable regulations – necessary to enable him or her to recognize possible dangers and implement the appropriate safety measures while performing tasks. Qualified employees must observe the relevant industry-specific rules and regulations.

2.4 Warnings in This Document

Warnings warn against hazards that may occur when handling the product. The signal word indicates the level of danger.

Signal word	Meaning
⚠ WARNING	Indicates a medium-risk hazard that could result in death or serious injury if not avoided.
⚠ CAUTION	Indicates a low-risk hazard that could result in minor or moderate injury if not avoided.
NOTE	Indicates a danger that leads to property damage.

2.5 Residual Risks

⚠ WARNING

The product contains a permanent magnet that generates a continuous magnetic field.

Danger for persons with pacemakers. Devices and data carriers can be damaged.

- Keep persons with pacemakers away from the product.
- Keep sensitive electrical devices and data carriers away from the product.

⚠ CAUTION

Risk of crushing if workpiece is abruptly attached

- Do not place any body parts between the gripping surface and the workpiece.

⚠ CAUTION

Falling product

Risk of injury

- Securely attach the product at the site of operation.
- Wear safety shoes (S1) and safety glasses when handling and mounting/dismounting the product.

2.6 Technical Condition

If the product is operated while in a defective state, safety and function will be impaired.

- Only operate the gripper when in perfect working order as originally delivered.
- Follow the maintenance plan (> See ch. Maintenance).
- Use only original spare parts from Schmalz.
- If the operating behavior changes, check the gripper for faults. Rectify faults immediately!
- Do not independently modify or alter the gripper.
- Safety features must not be disabled under any circumstances.

Schmalz assumes no liability for consequences of modifications over which it has no control.

2.7 Responsibility of the Integrator

The integrator is obligated to perform a risk assessment for the environmental conditions at the installation location.

The integrator is also responsible for third parties in the working area of the gripper. The operating company must ensure that they have the appropriate qualifications and skills.

- Ensure that regular breaks are taken.
- Ensure that the gripper cannot be started up by unauthorized persons.
- During maintenance or repair work, ensure that the gripper cannot be operated.
- Clearly define the responsibilities for the various activities performed with the gripper.
- Ensure that these responsibilities are observed.
- When handling unfamiliar loads, carry out tests where necessary to ensure safe operation:
  - The load to be lifted is sufficiently rigid so that it cannot be damaged during gripping and handling.

2.8 Country-Specific Regulations for the Operating Company

1. Observe the country-specific regulations regarding accident prevention, safety testing and environmental protection.
2. The gripper is used in combination with a collaborative robot.
   Ensure that the appropriate country-specific regulations and safety regulations are adhered to.

3 Product Description

3.1 Description of the Function

The magnetic gripper powered by compressed air lifts ferromagnetic workpieces using a magnetic force. It is used for handling sheet metal and perforated plates, complex laser-cut workpieces, sheet metal with drill holes and apertures, curved sheet metal and pipes. Series SGM-HPm is primarily designed for components with a sheet metal thickness < 2 mm.

To control the magnet, the system alternately supplies the two gripper connections with compressed air while venting the non-actuated connection.

By applying compressed air, the permanent magnet is moved toward the gripping surface (gripping the workpiece) or away from the gripping surface (releasing the workpiece).

The compressed air must be applied for at least one second to ensure reliable switching.

Gripping the workpiece

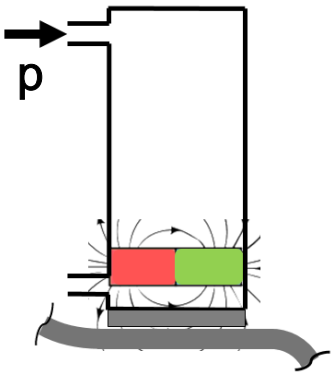

Depositing the workpiece

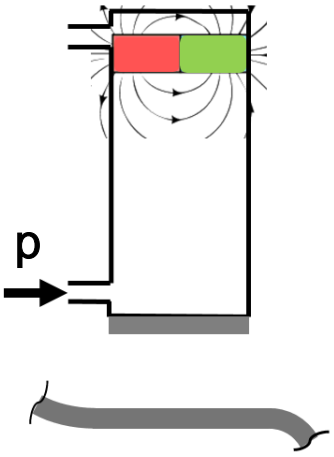

The bistable mode of operation allows safe gripping even during a power failure.

3.2 Scope of Delivery of the Kit and Design of the Magnetic Gripper SGM-SV

3.2.1 Scope of Delivery of the Kit with Part No. 10.01.17.00593

- Magnetic gripper
- Lightweight housing
- Plug-in screw unions
- Fastening screws
- Cable ties for securing hoses and cables

3.2.2 Product Design of the SGM-SV

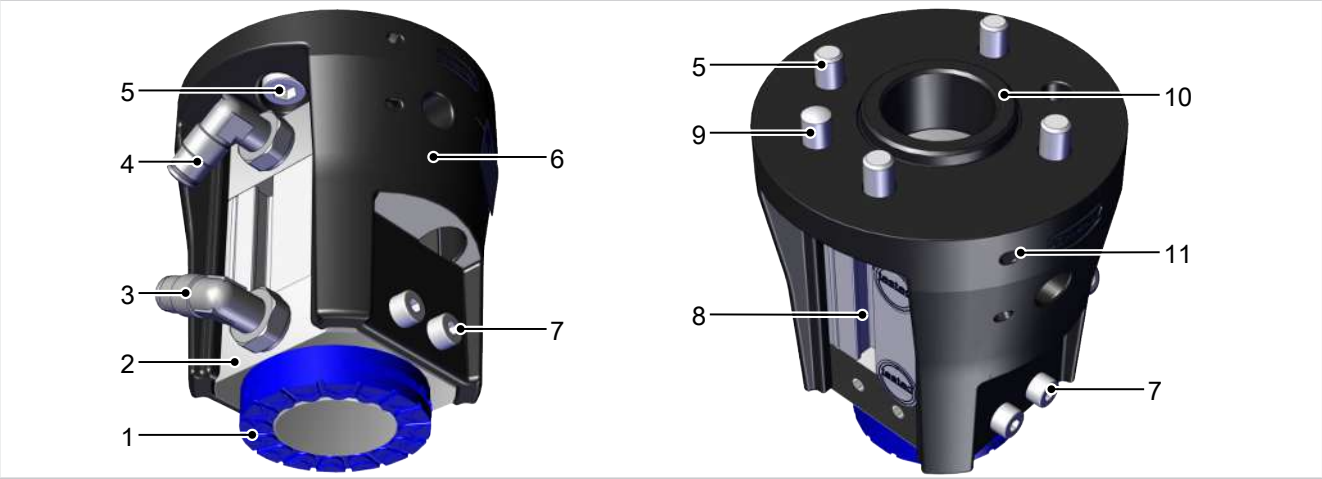

1	Gripper active surface with friction ring	2	Magnetic gripper
3	1/8" compressed air connection (depositing workpiece)	4	1/8" compressed air connection (gripping workpiece)
5	Fastening screws 4x (housing on robot flange)	6	Housing
7	Fastening screws 6x (magnetic gripper on housing)	8	Slot for optional proximity sensor
9	Dowel pin	10	Centering ridge
11	Mounting aid for cable ties		

4 Technical Data

4.1 General Parameters

Parameter	SGM-SV 40
Holding force [1] ≥ 0.5 mm, sheet metal	36 N
Holding force [1] ≥ 0.7 mm, sheet metal	60 N
Holding force [1] ≥ 1 mm, sheet metal	80 N
Holding force [1] ≥ 2 mm, sheet metal	100 N
Lateral force, dry [2]	58 N
Lateral force, oily [2]	52 N
Residual holding force	≤ 0.3 N
Opt. operating pressure	3.5 to 6.0 bar
Ambient temperature	+5° C to 70° C
Mode of operation	Bistable
Mounting position	Any
Operating medium	Air or neutral gas, 40 µm filtered, with or without oil, class 7-4-4 compressed air quality acc. to ISO 8573-1
Weight	0.45 kg

[1] All holding forces are static and unsecured when gripper active surfaces are fully covered on steel plate S235 at +20° C

[2] 2 mm steel plate

As the operating temperature increases, the holding force of the grippers decreases. We recommend performing tests before continuous operation.

The specified values apply to clean, smooth surfaces for low-carbon steel sheets. Dirty, rough, and highly alloyed steel sheets reduce the holding force.

For maximum holding forces, the component to be handled must completely cover the gripping surface.
Due to the design of the gripper, it is not possible to centrally grip parts that are smaller than the gripping surface.

4.2 Dimensions

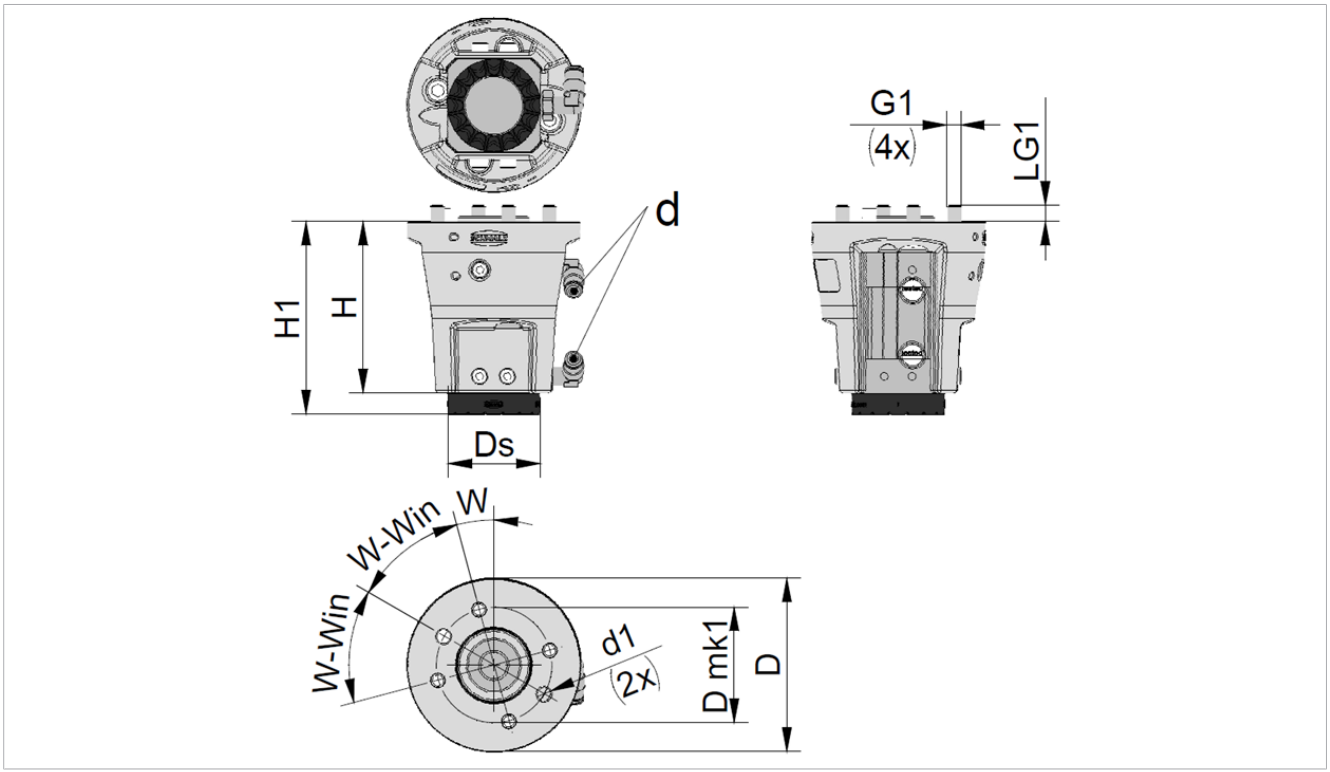

H	H1	d	d1	Ds	D
74	83.2	4	6.1	40	75

Dmk1	LG1	G1	W-Win	W
50	7	M6-AG	45°	15°

All specifications except angles are stated in mm.

5 Checking the Delivery

The scope of delivery can be found in the order confirmation. The weights and dimensions are listed in the delivery notes.

1. Compare the entire delivery with the supplied delivery notes to make sure nothing is missing.
2. Damage caused by defective packaging or occurring in transit must be reported immediately to the carrier and J. Schmalz GmbH.

6 Installation

6.1 Installation Instructions

⚠ WARNING

The product contains a permanent magnet that generates a continuous magnetic field.

Danger for persons with pacemakers. Devices and data carriers can be damaged.

- Keep persons with pacemakers away from the product.
- Keep sensitive electrical devices and data carriers away from the product.

⚠ CAUTION

Improper installation or maintenance

Personal injury or damage to property

- Prior to installation and before maintenance work, the product must be disconnected from the power supply, depressurized (vented to the atmosphere) and secured against unauthorized restart.

6.2 Mechanical Attachment

The gripper is adapted to a collaborative robot/handling system either directly or using replaceable flanges. Available flanges can be selected from the accessories range (> See ch. Accessories).

The gripper may be installed in any position.

1. Position the mount with the dowel pin on the robot flange in the correct orientation.

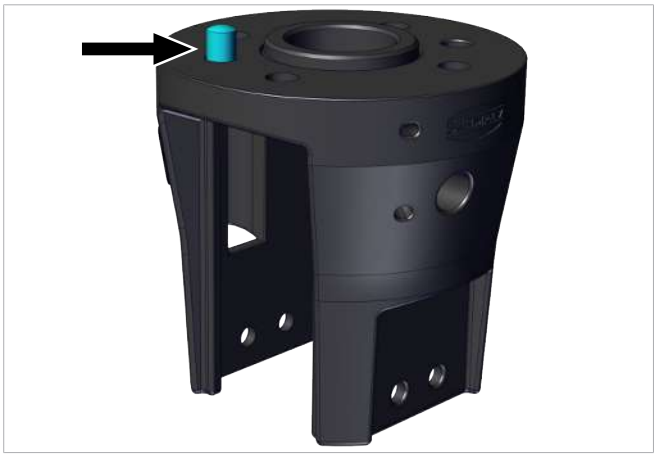

2. Attach the mount to the robot flange using 4 screws of size M6. Observe a tightening torque of 4.5 Nm.

3. Insert two of the screws into the mount from inside as shown in figure ❶. Pass the tightening tool through the outer opening and tighten the screw ❷.

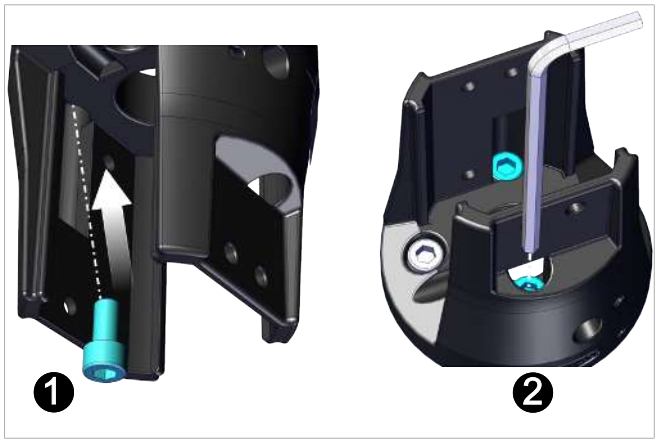

4. Push the magnetic gripper into the mount up to the stop.

5. Attach the magnetic gripper to the mount using 6 M4 screws. Observe a tightening torque of 2.5 Nm.

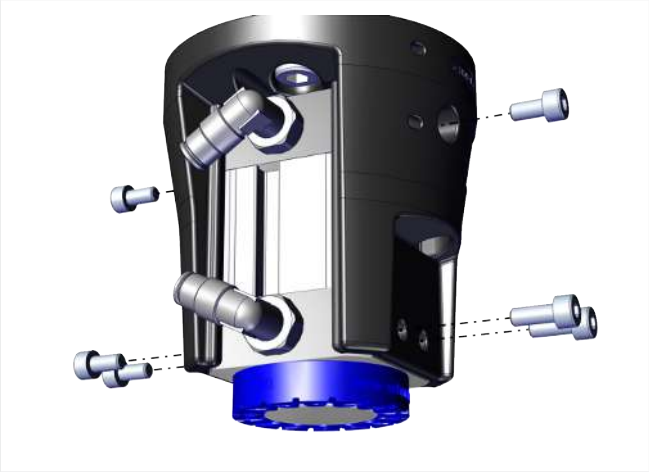

6.3 Pneumatic connection

Lay the hose lines:

- as short as possible
- without bends and crimps
- so that they do not rub

⚠ CAUTION

Getting caught in the hose lines

Risk of injury

- Route the hose lines closely along the robot arm without restricting the movement of the robot.
- When securing the hose lines, also use the mounting possibilities on the gripper (mounting aid for cable ties).
- Wear tight clothing when working on or near the robot.

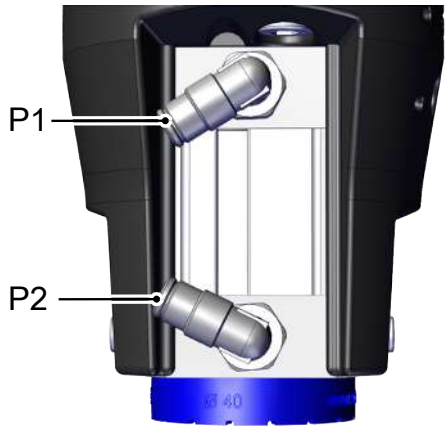

1. Connect the compressed air hose for “gripping” to the compressed air connection (P1) using the plug connection.
2. Connect the compressed air hose for “depositing” to the compressed air connection (P2) using the plug connection.

7 Faults, Causes, Solutions

Error	Cause	Solution
Workpiece is not gripped	Magnets are not in the corresponding end position	▸ Check compressed air supply Check hose connections and plug-in screw unions
	Pressure too low	
Magnetic gripper leaks when compressed air is applied	Sealing elements damaged; use at too high contact or ambient temperature	▸ Adhere to the defined temperature ranges.
Workpiece is only gripped with reduced holding force	The workpiece to be handled does not completely cover the gripping surface.	▸ Make sure that the workpiece to be handled completely covers the gripping surface.
	Contact elements damaged	▸ Replace damaged contact elements.
	Ferromagnetic pollutants on the gripping surface (e.g. iron shavings)	▸ Clean the gripping surface.
	Contact elements make insufficient or no contact with the pole shoes	▸ Make sure that the pole shoes are in flat contact when mounting the contact elements.
	The workpiece to be gripped has a dirty and/or rough surface or is highly alloyed.	▸ If possible, only handle low-carbon workpieces (steel sheets) with a clean and smooth surface.
	The operating or ambient temperature is too high.	▸ Adhere to the defined temperature ranges; if necessary, tests should be performed before continuous use.
When using sensors		
Sensor (for monitoring the piston position) cannot be taught	Sensor defective	▸ Replace the sensor.
Sensor cannot be taught or can only be taught with errors	Teaching is performed using a magnetizable tool (e.g. ballpoint pen refill, hexagon wrench, etc.).	▸ Use the teach-in tool supplied with the sensor or a comparable plastic pen.
Sensor signal is lost or faulty	Sensor not fully inserted into the corresponding sensor slot; sensor fastening screw is loose	▸ Push the sensor in as far as possible and tighten the fastening screw with the specified torque.
	Magnetic interference fields	▸ Avoid magnetic interference fields and maintain minimum distances.
	Ferromagnetic pollutants in the area of the sensor slot (e.g. iron shavings)	▸ Check the sensor slot(s) at regular intervals and clean them if necessary.

8 Maintenance

8.1 Safety

Maintenance work may only be carried out by qualified personnel.

⚠ WARNING

Risk of injury due to incorrect maintenance or troubleshooting

- Check the proper functioning of the product, especially the safety features, after every maintenance or troubleshooting operation.

⚠ CAUTION

Improper installation or maintenance

Personal injury or damage to property

- Prior to installation and before maintenance work, the product must be disconnected from the power supply, depressurized (vented to the atmosphere) and secured against unauthorized restart.

8.2 Maintenance Schedule

Schmalz stipulates the following checks and check intervals. The operator must comply with the legal regulations and safety regulations applicable at the location of use. These intervals apply to single-shift operation. For heavier use, such as multi-shift operation, the intervals must be shortened accordingly.

Maintenance task	Daily	Weekly	If required	Every six months	Yearly
Check wear of the friction ring and replace if necessary		X			
Check screw unions and plug connections		X			
Clean the product			X		

8.2.1 Cleaning the Magnetic Gripper

1. For cleaning, do not use aggressive cleaning agents such as industrial alcohol, white spirit or thinners. Only use cleaning agents with pH 7–12.
2. Remove dirt on the exterior of the device with a soft cloth and soap suds.
3. Ensure that no moisture gets into the sensors.

8.2.2 Replacing the Friction Ring

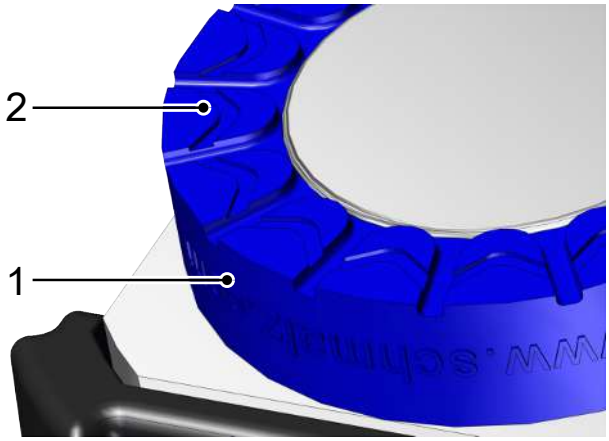

The friction ring (1) must be replaced at the latest when the V structure (2) on the friction ring (1) is no longer visible.

1. Pry off the friction ring (1) from the gripper using a screwdriver or similar tool.
2. Press on the new friction ring.

9 Accessories, Spare Parts and Wearing Parts

Magnetic gripper accessories

Description	Part no.
Mounting element prism set, for round workpieces	10.01.17.00604
Flange extension 200 mm for Rob-Set UR incl. screws	10.01.17.00601
Adapter flange set for Yaskawa HC10DT incl. screws	10.01.17.00602
Adapter flange set for Fanuc CR-4/7iA and Mitsubishi Assista incl. screws	10.01.17.00603
Adapter plug, AD-ST-G S-M8-4 B-M12-4 A	21.04.05.00579

Additional accessories, use of a proximity switch

Description	Part no.
Proximity switch PNP Sensor PNP	10.01.17.00199
Proximity switch NPN Sensor NPN	10.01.17.00215

Spare and wearing parts

Description	Part no.	Note
Magnetic gripper, SGM-SV 40 G1/4-IG	10.01.17.00229	Spare part
Solenoid valve, EMVP 24V-DC 5/3 NO	10.05.02.00246	Spare part
Valve assembly, UR-Plus set 3 & 5	10.01.45.00032	Spare part
Valve assembly, UR-Plus set 10 & 16	10.01.45.00033	Spare part
REIB-RING SGM 40	10.01.17.00137	Wearing part
Sensor screw (left-hand thread) ZUB SGM-S NAEH-SCHA SCREW	10.01.17.00509	Spare part
Plastic pin for sensor ZUB SGM-S NAEH-SCHA PIN	10.01.17.00510	Spare part
Plug-in screw union bracket STV-W G1/8-AG 4	10.08.02.00355	Spare part

10 Disposing of the Product

Recover the disassembled parts for recycling or reuse (provided no agreement on return or disposal has been made).

1. Dispose of the product properly after replacement or decommissioning.
2. Observe the country-specific guidelines and legal obligations for waste prevention and disposal.

11 Declarations of Conformity

11.1 EU Declaration of Incorporation

The manufacturer Schmalz confirms that the product described in these instructions fulfills the following applicable EU directives:

2006/42/EC	Machinery Directive

The product specified is solely intended for installation indoors in a complete system. Startup is prohibited until the end product has been declared to comply with the Directive 2006/42/EC.

The manufacturer commits to provide special documentation of the partly completed machinery to national authorities in electronic form if requested. The special technical documentation belong to the machine as per Annex VII Part B has been created.

The following harmonized standards were applied:

EN ISO 12100	Safety of machinery — General principles for design — Risk assessment and risk reduction
EN ISO 10218-2	Industrial Robots – Safety Requirements – Part 2: Robot Systems and Integration

Additional technical standards and specifications were applied:

ISO TS 15066	Human-robot collaboration

The Declaration of Incorporation valid at the time of product delivery is delivered with product or made available online. The standards and directives cited here reflect the status at the time of publication of the operating and assembly instructions.

11.2 UKCA Declaration of Incorporation

The manufacturer Schmalz confirms that the product described in these operating instructions fulfills the following applicable UK regulations:

2008	Supply of Machinery (Safety) Regulations

The product specified is solely intended for installation indoors in a complete system. The start of operations shall be prohibited until the conformity of the final product with the “Supply of Machinery (Safety) Regulations 2008” has been established.

The manufacturer commits to provide special documentation of the partly completed machinery to national authorities in electronic form if requested. The special technical documentation belonging to the machine as per Annex VII Part B has been created.

The following designated standards were applied:

EN ISO 12100	Safety of machinery — General principles for design — Risk assessment and risk reduction
EN ISO 10218-2	Industrial Robots – Safety Requirements – Part 2: Robot Systems and Integration

Additional technical standards and specifications were applied:

ISO TS 15066	Human-robot collaboration

The Declaration of Incorporation (UKCA) valid at the time of product delivery is delivered with the product or made available online. The standards and directives cited here reflect the status at the time of publication of the operating and assembly instructions.

At Your Service Worldwide

Vacuum automation

WWW.SCHMALZ.COM/AUTOMATION

Handling systems

WWW.SCHMALZ.COM/EN-US/VACUUM-LIFTERS-AND-CRANE-SYSTEMS

J. Schmalz GmbH
Johannes-Schmalz-Str. 1
72293 Glatten, Germany
T: +49 (0) 7443 2403-0
schmalz@schmalz.de
WWW.SCHMALZ.COM