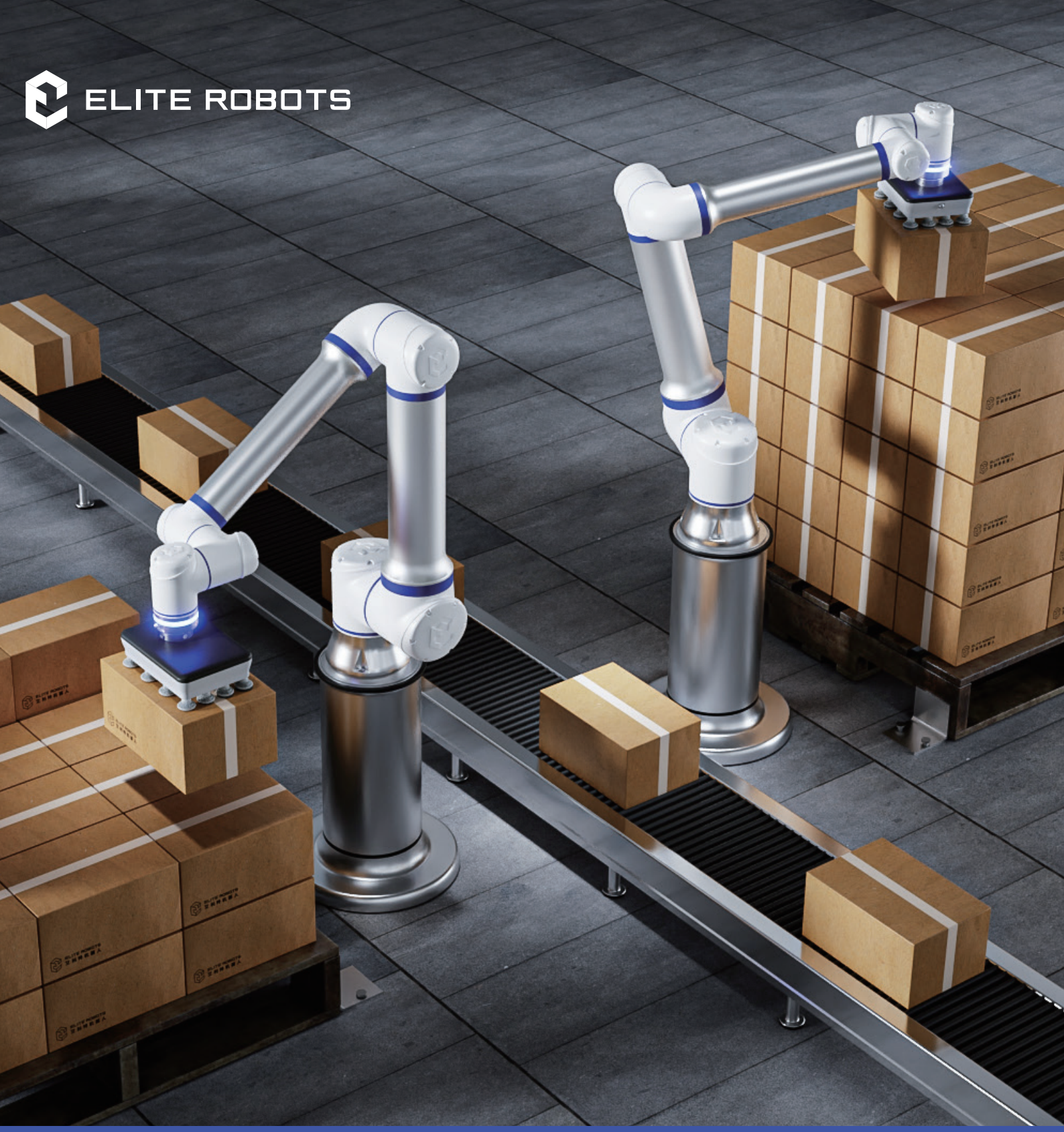

CS612 | 6-axis Collaborative Robot

CS SERIES

12kg
Payload

1304mm
Radius

±0.05mm
Repeatability

3.4m/s
Max TCP Speed

ELITE ROBOTS

CS612

CS SERIES

Robotic Arm

Payload		12kg
Radius		1304mm
Repeatability		±0.05mm
Axis		6
Joints rotation	J1-J6	±360°
Joints speed	J1-J2	120°/s
	J3	150°/s
	J4-J6	180°/s
Max TCP Speed		3.4m/s
IP rating		IP68
Temperature range		0-50 ℃
Relative humidity		<90% (non-condensing)
Typical power usage		435w
Mounting		Any angle
Tool I/O connectors		M8, 8pin
Tool I/O ports		4 config. DI, 4 config. DO; 1 AI, 1 AO
Tool I/O power supply		12V / 24V, 3A, 2A, 1A
Tool I/O communication		RS485
Footprint		Ø190mm
Weight		34kg
Material		Aluminum, Steel
Cable length		5.5m
Certifications		CE-EMC, CE-MD, NRTL, SEMI, RoHS, ISO-13849 ISO 5 Cleanroom

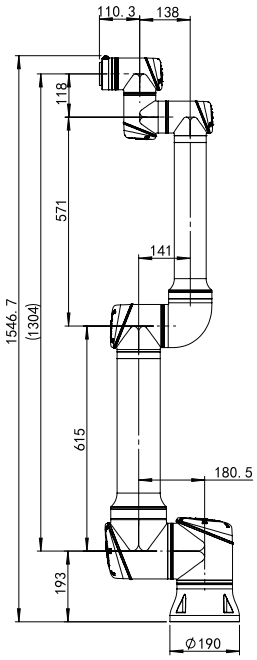

CS612 external dimensional drawing

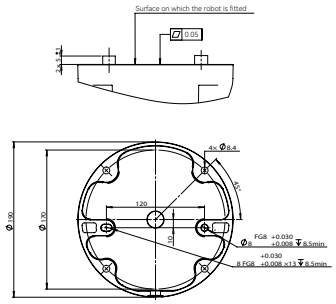

CS612 base top view

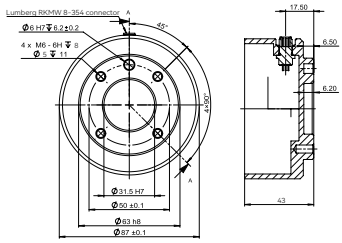

CS612 end flange

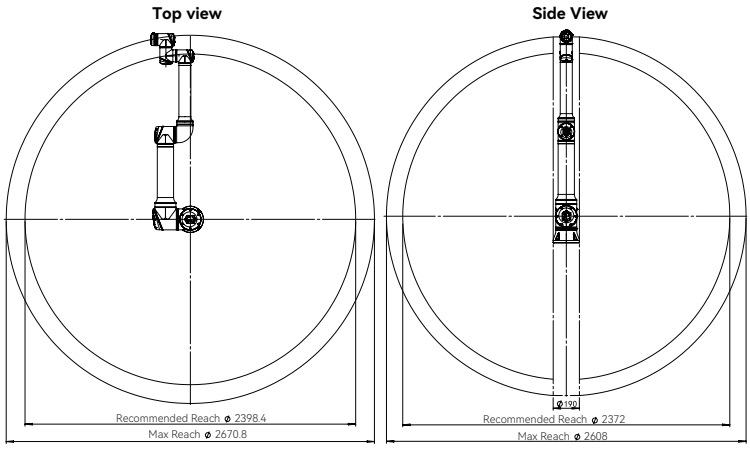

CS612 working range diagram

Teach-Pendant

Size	301mm x 232mm x 54mm
Material	Aluminum, Plastic
IP rating	IP54
Resolution	1280 x 800 pixels
Weight	1.7 kg
Cable length	5.5 m
Temperature range	0-50 ℃
Input method	Capacitive touch-screen

Controller

Size	505mm x 432mm x 257mm
Material	Aluminum, Steel
IP rating	IP44
I/O ports	24 x DI (8 config.), 24 DO (8 config.); 2 x AI, 2 x AO, 4 x High Speed DI
I/O power supply	24V; 3A (internal), 6A (external)
Communication	3 Ethernet, 1 RS485, TCP/IP, MODBUS TCP/RTU, EtherNet/IP slave, Profinet slave
Temperature range	0-50 ℃
Power source	100-240 VAC, 50-60 Hz / 19-72VDC

The controller is also available in an OEM version.

www.eliterobots.com

Elite Robots @EliteRobotsOfficial